Sensor Testing Basics Cheat Sheet

2-wire and 3-wire sensor circuit checks and FMI meanings. Values are typical only; the OEM service information governs.

3-wire sensor circuit and meter connections

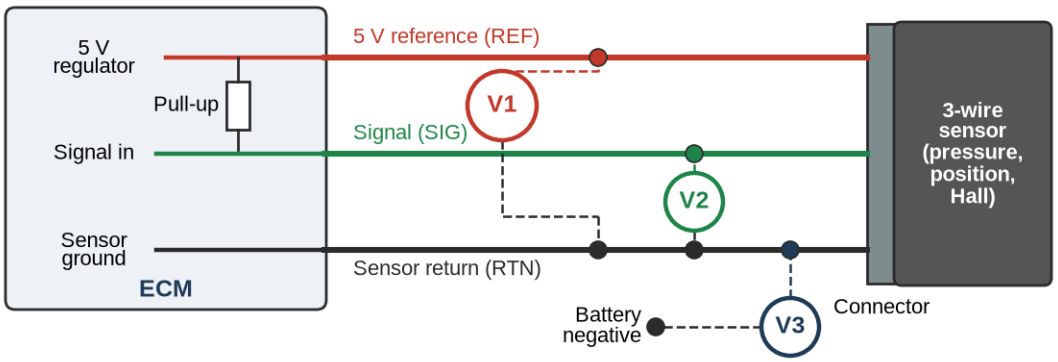

V1 Reference to return

About 5 V (typical 4.8 to 5.2 V)

V2 Signal to return

About 0.5 to 4.5 V, changes smoothly with pressure or position

V3 Return to battery negative

Under about 0.1 V (good: under 0.05 V)

Key on, sensor plugged in, back-probed at the connector

Test with the sensor plugged in and the key on, so the circuit carries its normal current. Use a 10 megohm digital multimeter and back-probe pins.

Tools needed

- Digital multimeter (10 megohm input) with min/max; graphing meter or scope for speed and Hall sensors
- Back-probe pins and a terminal test kit matched to the connector
- Fused jumper leads; scan tool with live data
- Original equipment manufacturer (OEM) service information: wiring diagram, connector views, sensor specs

Safety

Never pierce wire insulation. Holes let water wick into the harness. Back-probe along the seal, or use the correct terminal probe so terminals are not spread.

No test lights on sensor or engine control module (ECM) circuits. They draw enough current to damage ECM drivers.

Never jumper the 5 V reference to ground or to battery voltage. Jumper only the signal circuit, and only with a fused jumper.

Keep clear of belts and fans when testing with the engine running.

Step-by-step procedure

1. **Read the code first.** Note the Suspect Parameter Number (SPN) and Failure Mode Identifier (FMI), or the P-code, and freeze frame. Several sensor codes at once often share one 5 V reference, ground or connector.
2. **Plausibility, key on, engine off.** After a cold soak, all temperature sensors read within a few degrees of each other. Pressure sensors read 0 gauge, or barometric if absolute.
3. **Reference (V1).** Back-probe the 5 V reference (REF) to sensor return (RTN) at the sensor: about **5 V**. Low on several sensors: unplug sensors on that reference one at a time. A shorted sensor can pull it down.
4. **Ground (V3).** Sensor return to battery negative, key on: under about **0.1 V**. Good circuits usually read under 0.05 V.
5. **Signal (V2).** Signal (SIG) to return (RTN) should match live data and change smoothly as the input changes (pressure, pedal, temperature).
6. **Wiggle test.** Watch live data or meter min/max while flexing the harness and connector. A dropout or spike marks the intermittent spot.
7. **Bias check (pull-up).** Unplug the sensor, key on: the signal usually reads near 5 V and the scan tool shows the high extreme. Fused jumper from signal to return: it should swing to the low extreme. If both work, the harness and ECM are good; suspect the sensor. Some inputs use a pull-down instead; check the diagram.
8. **2-wire sensors.** Negative temperature coefficient (NTC) thermistors: resistance drops as temperature rises, so signal voltage drops as the engine warms. Magnetic speed sensors: check resistance to OEM spec and AC volts rising with speed; check air gap and debris on the tip.
9. **Hall sensors** switch between near 0 V and the supply (5 V or 12 V per OEM). Verify with a scope or slow rotation. Repair, clear codes, recheck live data.

FMI and readings

FMI or reading	Meaning	Check first
FMI 3	Voltage above normal or shorted high	Open return, signal shorted to reference or power, open signal on a pull-up input
FMI 4	Voltage below normal or shorted low	Signal shorted to ground, open or low reference, open signal on a pull-down input
FMI 2	Erratic, intermittent or incorrect	Wiggle test, connector, compare to related sensors
FMI 0, 1, 15 to 18	Valid signal, value out of range	Test the system (real pressure or temperature) before the sensor
Pressure sensor, 0 psi gauge	About 0.5 V typical	Engine off, pressure bled down
Coolant thermistor	Typical: thousands of ohms cold, a few hundred hot	Compare to the OEM temperature chart